CODE	DESCRIPTION	POS.	GR.
591918A72	CONTROL PANEL ASSEMBLY	1	
281242B77	BONNET	2	
281244A77	GRILLE	3	G0013A
273098A	ADHESIVE LABEL	3	G0013A
281600A69	CONDENSE TANK	5	G0014A
281148A69	BUOY	5	G0014A
281249A72	BUOY MOUNT	5	G0014A
141322A1	SELF-TAPPING SCREW 4,2X9,5	5	G0014A
141322A1	SELF-TAPPING SCREW 4,2X9,5	5	G0014A
271982A	AIR INDUCTION FILTER	7	
281246B72	CONDENSE TANK	8	
281205A72	INFERIOR BASIS	9	
279309A72	FRONT WHEEL DIAMETER.35	10	
256764A	SHAFT FOR FRONT WHEEL	11	
255605A70	SOURCE CABLE H05VVF 3X1 L.M.2(ART.7	12	
276035A	COMPR.TECUMSEH AZ0411YS (DCAZ-036)	14	G0002A
277579A	COVER FOR TERMINAL	14	G0002A
276037A	RELAY (MOD. RP 3715)	15	G0002A
276036A	KLIXON (MOD.T25910 23	16	G0002A
281585A	COMPRESSOR FIXING SHAFT	18	
281503A	VIBRATION-DAMPER	19	
281586A	COMPRESSOR SHAFT RING	20	
276051A	TERMINAL BOX	21	
281243A77	BACK	22	G0185A
272804A	LABEL	22	G0185A
281814A72	SECCOPUR THERMO SCROLL	23	
276045A	CENTRIFUGAL FAN	24	
281251B72	SECCOPUR THERMO CENTRAL SUPPORT	26	
272137B	TOP INSULATOR	27	
594590B	COIL ASSEMBLY	28	
276036A	KLIXON (MOD.T25910 23	29	276035A
256930A	HEATING RESISTANCE	29	
276037A	RELAY (MOD. RP 3715)	30	276035A
279396A	CLIPS	30	
277579A	COVER FOR TERMINAL	31	276035A
276377A	EVAP.TEMP.SENSOR	33	591918A72

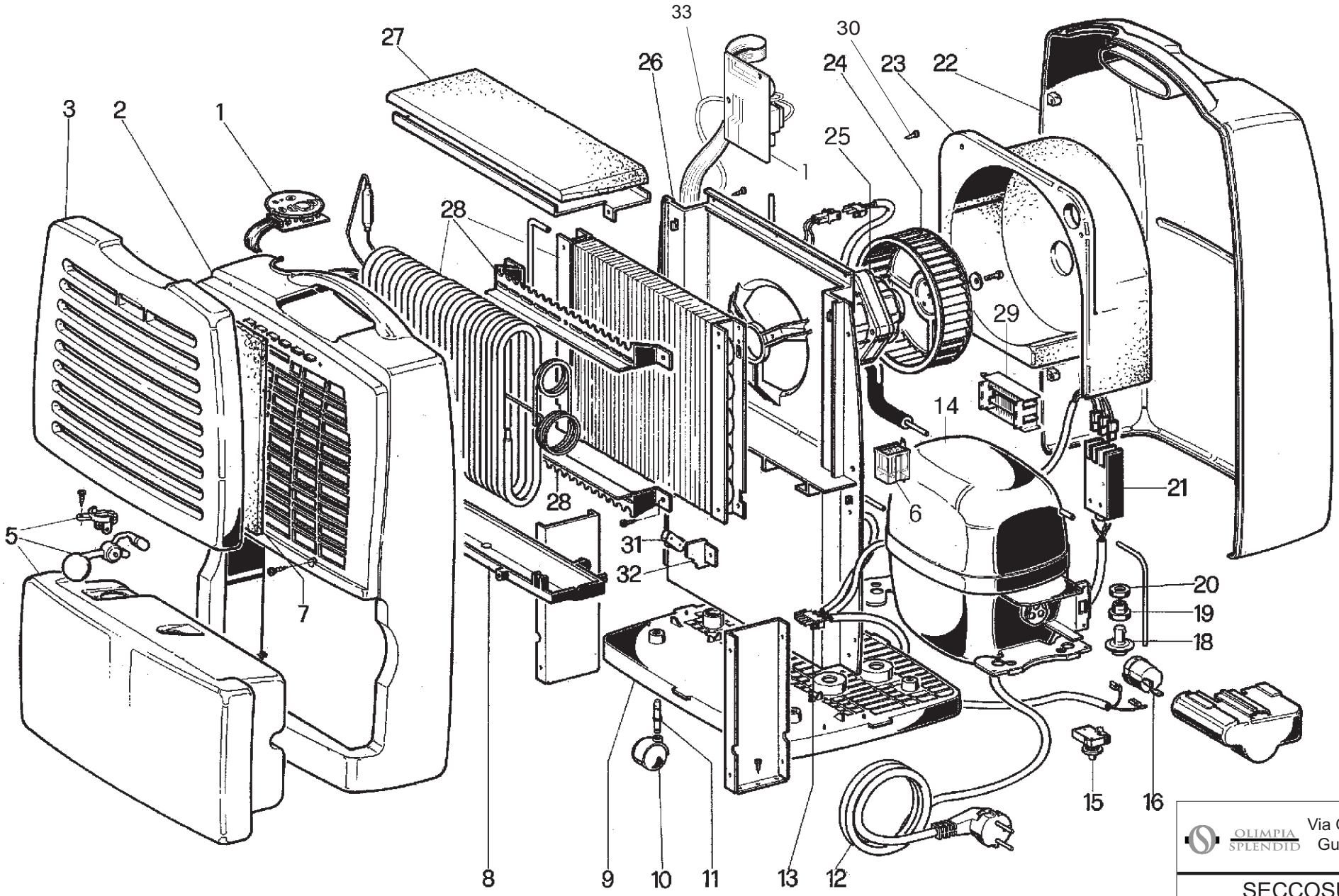

OLIMPIA SPLENDID
Via G. Rossa 1-3
Gualtieri (R.E.)

SECCOSUPER THERMO

Agg.Maggio 2011 - RIF: 044.02